1. Basis of mass spectrometry

[Purpose]

You will learn the basis of mass spectrometry which is used for the partial pressure measurement of residual gases in a vacuum chamber and the compositional analysis of samples. In addition, you will learn the principle and practical application of the quadrupole linear ion trap developed from a quadrupole mass spectrometer.

[Principle]

A mass spectrometer is a system used to ionize atoms and molecules contained in samples, and to separate and detect the generated ions according to their specific charge (Q/m) using an electromagnetic field. One of the characteristics of the mass spectrometer is its ability to analyze the composition of a minute sample. In this laboratory session, the operating principles of two typical mass spectrometers and the quadrupole linear ion trap are explained.

《Magnetic deflection mass spectrometer》

When a particle with a mass m and an electric charge Q moves in a uniform magnetic field B, the charged particle is subjected to a force in a direction perpendicular to its velocity v. In particular, when the moving direction of a particle is perpendicular to the direction of the magnetic field, the particle follows a circular path of radius r_c given by

$$r_c = \frac{mv}{QB} \tag{1}$$

The relationship between v and kinetic energy of the particle is given by

$$QV = \frac{1}{2}mv^2 \tag{2}$$

where V is the acceleration voltage of the charged particle that enters the uniform magnetic field. By solving v and substituting it into Eq. (1), we obtain

$$r_c = \frac{1}{B}\sqrt{\frac{2V}{Q/m}} \tag{3}$$

Mass spectrometry is carried out by placing a slit in front of the detector (point Q in Fig.1) because the radius of the circle, r_c, depends on specific Q/m assuming that V is constant. Fig.1 shows the trajectories of charged particles that enter a sector magnetic field (shaded area; central angle, 90°). The trajectory at the center is the central trajectory when the angles of incidence and emission at the magnetic field are 90°. With this special arrangement, the particles emitted from point P with a certain angle of emission and a momentum mv converge at point Q on the extension of line PO. This mechanism can be applied to a mass spectrometer because the specific charge of particles that converge at point Q can be selected by changing the strength of the magnetic field. The mass spectrometers using a magnetic field can be designed to have a high resolution; however, they have a large size of the electromagnet. In addition, these mass spectrometers are not appropriate for high-speed sweep because the strength of the magnetic field must be varied by changing the magnitude of the electric current that flows in the electromagnet to change the mass of ions to be analyzed.

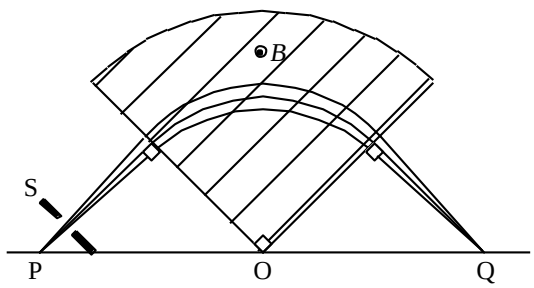

Fig.1 Deflection and convergence of charged particles in uniform sector magnetic field

《Quadrupole mass spectrometer》

The quadrupole mass spectrometer was developed by Paul in 1953 and is mainly used for the partial pressure measurement of gases in a vacuum chamber. Compared with other systems using a magnetic field, the quadrupole mass spectrometer is small and simple and can analyze ions of various masses at a high speed. In general, mass spectrometry is carried out using four cylindrical electrodes as shown in Fig.2, to which a high-frequency AC voltage ($V_{ac}\cos\Omega t$) in the range of a few hundred kHz to a few MHz and a DC voltage (V_{dc}) is applied.

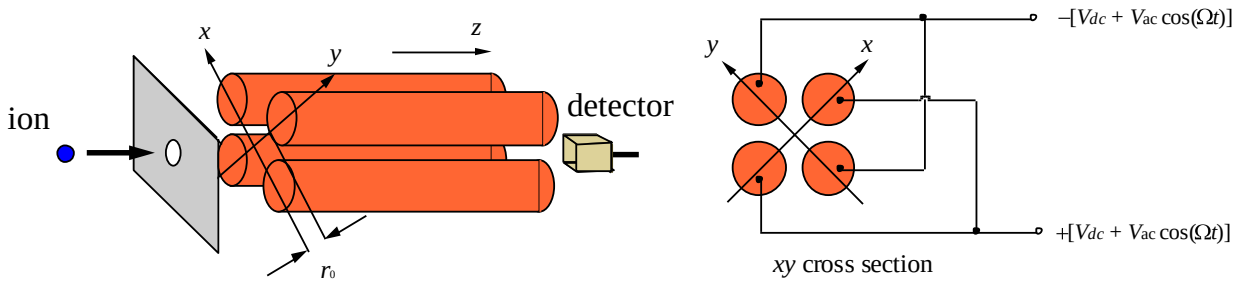

Fig.2 Schematic of quadrupole mass spectrometer

The ions that enter the mass spectrometer are subjected to the force generated by a radio-frequency electric field. Most of the ions are lost by collisions with the electrodes. Only ions that satisfy certain conditions enter the spectrometer through the four cylindrical electrodes and are detected as an ion current. Ions with a specific Q/m are transmitted through the four electrodes when the parameters a and q defined by Eq. (4) fall inside the bold curve in Fig.3 (stability region). Note that r_0 is half the minimum distance between two diagonal cylindrical electrodes (Fig.2).

$$a \equiv \frac{8QV_{\mathrm{dc}}}{mr_0^2\Omega^2}, \qquad q \equiv \frac{4QV_{\mathrm{ac}}}{mr_0^2\Omega^2} \tag{4}$$

For mass spectrometry, the combination of two parameters at the corner of the bold curve indicated by an arrow (approximately $a = 0.237$ and $q = 0.706$) is used. The ratio of a to q is given by

$$\frac{a}{q} = \frac{2V_{\mathrm{dc}}}{V_{\mathrm{ac}}} = 2k \tag{5}$$

Therefore, when V_{ac} and V_{dc} are set to satisfy a voltage ratio of $k \leq 0.168$, a straight line passing through the origin crosses the stability region (dashed line in Fig.3). Mass spectrometry is possible by changing V_{ac} and V_{dc} while maintaining k at a constant value because the value of Q/m that crosses the stability region changes according to the change in voltage following Eq. (4). The mass resolution $m/\Delta m$ is given by

$$\frac{m}{\Delta \mathrm{m}} = \frac{(m_1 + m_2)/2}{m_1 - m_2} = \frac{q_1 + q_2}{2(q_2 - q_1)} \tag{6}$$

assuming that the intersections of the boundary of the stability region with the straight line are q_1 and q_2, and the corresponding masses of ions of charge Q are m_1 and m_2. To improve the mass resolution, k should be as close to 0.168 as possible. The relationship between the inverse of specific charge, frequency, and voltage at $q = 0.706$ (q at the corner of the stability region) is given by

$$\frac{m}{Q} = \frac{1}{0.706}\frac{V_{\mathrm{ac}}}{\pi^2 r_0^2 f^2} \tag{7}$$

This equation indicates that a larger AC voltage V_{ac} is required with increasing mass. Under an ideal condition, $\Delta q = q_2 - q_1$ is determined by the voltage ratio k; thus, the mass resolution $m/\Delta m$ is constant and independent of mass. However, actual quadrupole mass spectrometers consist of finite electrodes and the condition for ion transmission is restricted by the geometric dimensions of the electrodes rather than the stability region. Therefore, the ion transmittance decreases when the mass resolution is increased. The mass resolution also depends on the energy of incident ions, the expansion of beams, and the size of the incidence slit. In actual spectrometers, $m/\Delta m$ is proportional to the mass m and Δm tends to be constant regardless of mass.

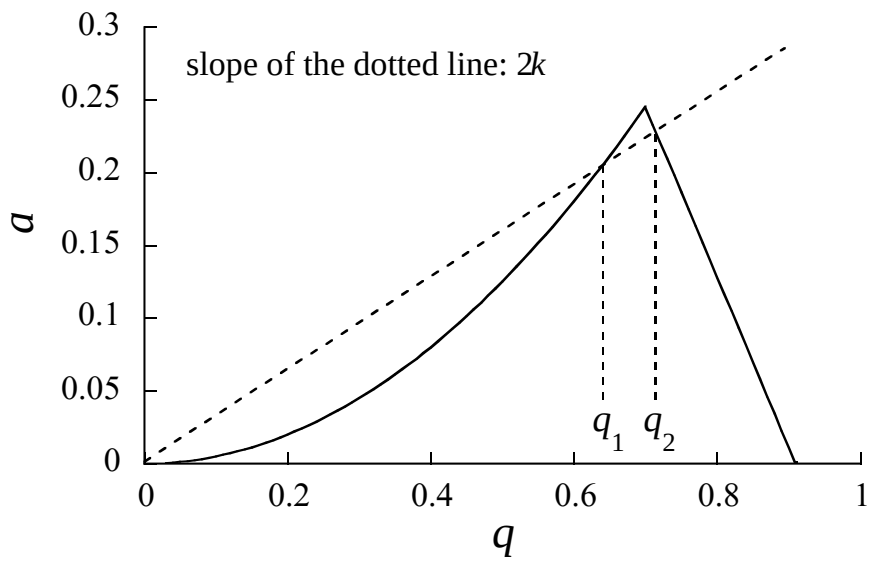

Fig.3 Stability region of ion trajectory for quadrupole mass spectrometer.

《Ion trap》

Ion trap is a generic term for experimental systems that trap ions in a narrow space using an electromagnetic field. Ion traps are mainly classified into two types.

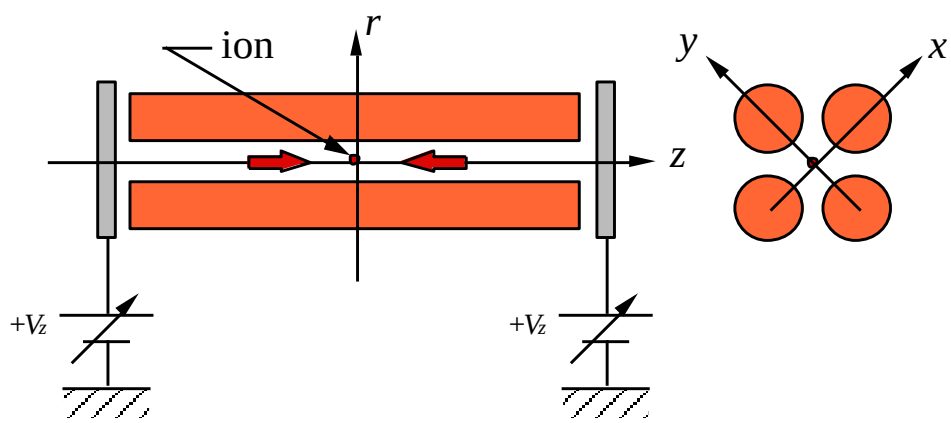

Fig.4 Stability region (left) and electrode structure (right) of linear ion trap. The region of $a < 0$ is also a stability region where ions are trapped, although it is not shown in Fig.3.

1. Systems that trap ions by the combination of alternate current (AC) and direct current (DC) electric fields.
2. Systems that trap ions by the combination of a static magnetic field and a DC electric field.

In this laboratory session, a type 1 ion trap is used. In a quadrupole mass spectrometer (Fig.2), ions with a certain specific charge enter the ion trap along the *z*-axis. This means that the ions are trapped along the *x*- and *y*-axes. To realize a three-dimensional ion trap, plate electrodes, as shown in Fig.4, are placed at both ends of the cylindrical electrodes to apply a positive DC voltage (Vz). When the position of ions deviates from the origin of the *z* coordinate, the ions are subjected to a force generated by the static electric field between two plate electrodes in the directions of red arrows, leading to the trapping of ions along the *z*-axis. Whether ions are trapped in a linear ion trap is determined by the parameters a and q in Eq. (4), similarly to the case of the quadrupole mass spectrometer (Fig.4, left). The region inside the solid curve is called the stability region of the linear Paul trap (quadrupole linear ion trap).

[Laboratory apparatus, instruments, and reagents]

《On laboratory bench》			
Linear ion trap	1,	DC power source	2
Oscillator (function generator)	2,	Digital oscilloscope	1
Neon sign transformer	1	Digital camera	1
PC used for analysis	1,	Loupe	1
Alumina microparticles	1,	Dropper	1

[Experimental procedures]

The students are divided into two groups. One group carries out experiments A and B (Day 1) and then simulation experiment C (Day 2), and the other group carries out C, then A and B.

A. Measurement of frequency of charged microparticles trapped in a linear ion trap

Please refer to Appendix A for operation of a linear ion trap.

《Measurement principle》

When charged microparticles trapped in a linear ion trap that is placed horizontally (Fig.5) are observed from above, microparticles shaped like a rod because of vibration are observed. In this measurement, the vibration frequency of microparticles is measured by the strobe effect; a light-emitting diode (LED) blinks to capture the still images of microparticles.

《Measurement procedure》

1. Confirm that the power switch of the linear ion trap is turned on and that the voltage is adjusted to the predetermined value. Also confirm that the switch of the oscillator for driving the LED is turned on and that the LED lights at a duty ratio of 100% (refer to the operation manual for ion trap).
2. Trap microparticles by the predetermined method. Confirm visually that microparticles are trapped (trapped microparticles should be shaped in a rod). Record the experimental conditions [the driving frequency of the ion trap, the amplitude of AC voltage, and the voltage of the DC power source (plate voltage)] at this time on your notebook.
3. Set the duty ratio of the oscillator for driving the LED to 10% and the frequency to 1 Hz. The LED blinks at a frequency of 1 Hz.
4. Either you or your partner gradually increases the blink frequency of the LED from 1 Hz while the other carefully observes the behavior of the microparticles. When the blink frequency of the LED approaches the driving AC frequency of the linear ion trap, the microparticles vibrate. Confirm that the frequency at which this vibration almost stops is equal to the driving AC frequency of the linear ion trap, which is the vibration frequency of the microparticles, f.
5. Drive the LED at frequencies of $f/2$, $2f$, and $3f$. Sketch the behavior of the microparticles in your notebook. Also, discuss the reasons for this behavior in your notebook.

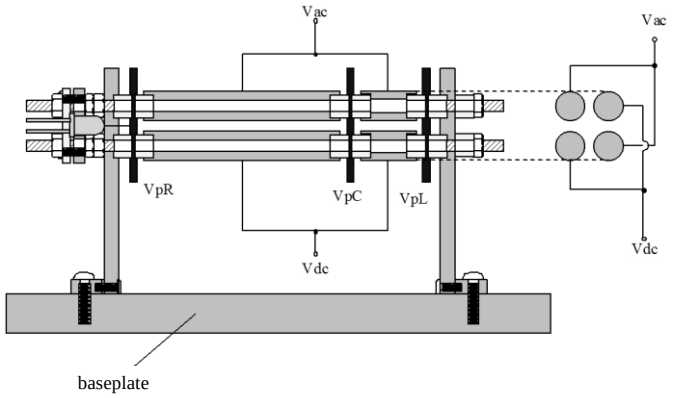

Fig. 5 Structure of linear ion trap used in the experiment (V_{pR}, V_{ac}, and V_{dc} are voltages explained in the text).

《Exercises》

1. Write all the forces applied to the charged microparticles trapped in the linear ion trap.
2. Why do microparticles form the shape of a rod when the duty ratio of the oscillator for driving the LED is 100%? Also discuss the reason why microparticles are observed as dots when the blink frequency of the LED corresponds to the vibration frequency of microparticles.
3. Discuss the methods used to observe microparticles more clearly as dots.

B. Measurement of mass and specific charge of microparticles trapped in linear ion trap

《Measurement principle》

The mass and specific charge of the microparticles are measured utilizing gravity by trapping microparticles in the linear ion trap placed vertically, as shown in Fig.6.

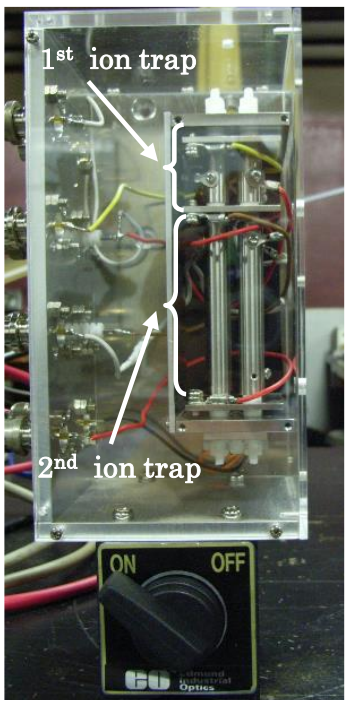

Fig.6 Linear ion trap placed vertically.

Principle of measurement of mass

First, trap a microparticle in the first ion trap (shorter ion trap). Set the voltage of the plate electrode placed at the center (plate voltage) to 0 V to drop the microparticle into the second ion trap. Measure the distance that the microparticle drops (drop length) and the time required for the microparticle to drop (drop time), and calculate the mass m by the following method.

The microparticle has a size of several tens of micrometers and is subject to air resistance while dropping. Gravity and air resistance balance in the second ion trap, and

$$m\frac{dv_z}{dt} = mg - \gamma v_z = 0, \quad v_z = \frac{mg}{\gamma} \tag{8}$$

where v_z is the velocity of the microparticle, γ is the damping constant that is proportional to the velocity, and g (= 9.80665 m/s^2) is the acceleration of gravity. Assuming that the drop length and drop time in the second ion trap are L and T_L, respectively,

$$v_z = \frac{L}{T_L} = \frac{mg}{\gamma}, \quad \gamma = \frac{mg}{L}T_L \tag{9}$$

If we assume that the microparticle is spherical and its radius is a, the coefficient of proportion is given by $\gamma = 6\pi\mu a$ [refer to Ref. (6)]. Here, μ is the coefficient of air viscosity (in this study, $\mu = 1.8\times10^{-5}$ kgm^{-1}s^{-1}). From Eq. (9),

$$\gamma = 6\pi\mu a = \frac{mg}{L}T_L \tag{10}$$

The mass m is given by

$$m = \frac{4\pi a^3}{3}\rho \tag{11}$$

where ρ is the density of the microparticle. From Eqs. (10) and (11), the radius of the trapped microparticle is given by

$$a = \sqrt{\frac{9\mu L}{2\rho g T_L}} \tag{12}$$

The mass m is obtained by substituting a obtained from Eq. (12) into Eq. (11). Namely, the mass m of the trapped microparticle can be determined by measuring drop length L and drop time T_L. In this experiment, T_L is determined by counting the number of frames obtained by high-speed continuous photography of the dropping microparticle.

Principle of measurement of specific charge

A region of combinations of parameters exists where ions are stably trapped in the linear ion trap. From Fig.4, the maximum q (q_{max}) at which ions are stably trapped at a = is 0.91. The driving AC frequency of the linear ion trap is gradually decreased to increase the parameter q while the microparticle is being trapped. When the amplitude V_{ac} and the angular frequency Ω of the AC voltage, at which ions are finally removed, are determined, the specific charge of the trapped microparticle is obtained as

$$\frac{Q}{m} = \frac{0.91\Omega^2 r_0^2}{2V_{ac}} \tag{13}$$

The internal radius of the linear ion trap used in this experiment, r_0, is 3.5 mm.

《Measurement procedure》

1. Set the duty ratio of the oscillator for driving the LED to 100%. Trap many charged microparticles in the first ion trap.
2. While checking the camera monitor, turn off the OUTPUT switch for the plate voltage (V_{pC}) to drop the microparticles. When the microparticles are not clearly captured on the camera monitor, adjust the focus and repeat steps 1 and 2 again until the microparticles are clearly captured on the monitor.
3. Continuously photograph the microparticles and confirm that the behavior of dropping microparticles is recorded. You are now ready for measurement. Do not move the camera at the end of the experiment (focus readjustment is required if you move the camera).
4. Trap "only one" microparticle in the first ion trap. If many microparticles are trapped, remove unnecessary microparticles by flowing air from a clean dropper separately prepared.
5. Remove all the ions trapped in the second ion trap (lower ion trap) to empty the trap (turn off the OUTPUT switch for the plate voltage (V_{pR}) and turn on again, or insert the dropper into the lower hole on the second ion trap and blow away the remaining microparticles while taking care not to remove the microparticle in the first ion trap).
6. Select the continuous mode of the digital camera, start shooting by holding down the shutter button, and set the plate voltage (V_{pC}) to 0 V to drop the microparticle. (Note) Hold down the shutter button. Continuous shooting is possible only while you hold down the shutter button down (maximum shooting time, 2 s).
7. Confirm that the dropping microparticle was successfully recorded. If it was not successfully recorded, repeat steps 4–6. Proceed to the measurement of specific charge if you confirm that the behavior of the dropping microparticle was successfully recorded and the dropping microparticle was trapped in the second ion trap.
8. Either you or your partner gradually decreases the frequency of the oscillator for driving the linear ion trap while the other carefully observes the behavior of the microparticle.
9. Record the AC voltage ($V_{p-p} = 2V_{ac}$) and frequency ($\Omega/2\pi$) at which the microparticle in the linear ion trap is lost.
10. Return the driving frequency of the linear ion trap to its original value and repeat the measurement at least three times.

《Exercises》

Use a spreadsheet and carry out data analysis efficiently (Fig.7).

1. Playback the continuous images frame by frame using the digital camera to calculate the time required for the microparticle to drop between two black markings (L = 25 mm), T_L, from the number of frames and determine the dropping velocity (v_z). *Note that an error of approximately 1/60 s should be considered for the calculation of T_L because the time resolution Δt is 1/60 s.
2. Calculate the radius and mass of the microparticle. Use the density of microparticles (ρ = 3.97 g cm^{-3}) for the calculation.
3. Calculate the specific charge of the microparticle from the frequency and amplitude of AC voltage obtained in the measurement of specific charge.
4. Calculate the charge Q and charge number N_Q [$N_Q = Q/e$, elementary charge $e = 1.602\times10^{-19}$ C] of the trapped microparticle.
5. Evaluate the validity of your experimental results by comparing them with the diameters of alumina microparticles in Table I. If the experimental results are larger or smaller than the values in Table I by at least two orders of magnitude, suspect miscalculation.
6. Determine which parameters you measured that may significantly affect the accuracy of the results (i.e., examine the level of effect of the change in the measured value within the error range on the change in the results).

L	25	[mm]
r_0	3.5	[mm]
μ	1.80E-05	[kg/m/s]

Data Number	Number of frames	T_L [s]	a [m]	m [kg]	$\Omega/2\pi$ [Hz]	$2V_{ac}$ [V]	Q/m	Q [C]	N_Q	Comments
1										
2										
3										
4										

Fig.7 Example of data summarization.

Table I Size of alumina microparticles used in experiment

Granularity	Particle diameter at 50% point d [μm]	Granularity	Particle diameter at 50% point d [μm]
#320	46.0±2.5	#500	28.0±2.0
#400	34.0±2.0	#600	24.0±1.5

C. Computer simulation of quadrupole mass spectrometer

The purposes of this exercise are to understand the principle and characteristics of the quadrupole mass spectrometer by computer simulation. Refer to the operation manual for the mass spectrometry simulation program. Please refer to Appendix B for operation of the simulation program. Also refer to "PhysicalChemistryLab(2019)" and chronological scientific tables for physical constants required for numerical calculation and simulation.

《Exercises》

Use the specified values (L = 120 mm, E_{in} = 70 eV, a/q = 0.3356, and R_{in} = 0) unless otherwise designated for the simulation in the following exercises. The unit of mass is the unified atomic mass unit [u].

1. Set following parameters of the quadrupole mass spectrometer: f = 3.0 MHz, r_0 = 3.5 mm, and a/q = 0.3356. Calculate the amplitude of radio-frequency AC voltage V_{ac} and the amplitude of DC voltage V_{dc} required for the mass spectrometry of various molecular ions (H_2^+, H_2O^+, N_2^+, O_2^+, and CO_2^+) according to Eqs. (5) and (7) using a spreadsheet (EXCEL). Use M = 2 u (H_2^+), 18 u (H_2O^+), 28 u(N_2^+), and 32 u (O_2^+) in the calculation (The unit "u" expresses unified atomic mass unit.)

2. Start the ion trajectory program using the default values of the simulation program. The ion trajectory of H_2O^+ (M = 18 u) detected by the mass spectrometer will be displayed. Input the values of V_{ac} and V_{dc} for H_2O^+ obtained in Exercise 1 into the simulation program to display the ion trajectory and confirm that H_2O^+ is detected by the mass spectrometer without fail.
   a) Changed the position $R_{in} = (x^2+y^2)^{1/2}$ of the incident ion beam from 0 to 0.25 mm by 0.05 mm step, and observe the ion trajectory on the X-Y, Z-X, Z-Y planes.
   b) Increase Vdc voltage up to Vdc + 0.6 V by 0.1 V step, and sketch the ion trajectories on the X-Y, Z-X, Z-Y planes at each step.

3. <u>Terminate the simulation program and restart it again</u>. Load the data file of mass spectra of H_2O^+ (file name: H2O) into the program to obtain the mass spectra under conditions a)–d) described below. Record the peak intensity (height), the spectral width ΔM (full width at half maximum), and the shape of the mass spectrum (sketch) in your notebook. Observe the spectrum M in the range of 17.5–18.5 with a mass step of 0.025. Input the specified values (L = 120 mm, E_{in} = 70 eV, a/q = 0.3356, and R_{in} = 0) unless otherwise designated.
   a) Change the mass resolution, a/q, to 0.333, 0.334, 0.335, or 0.3356.
   b) Change the length of the mass spectrometer tube, L, to 70, 90, 120, or 160 mm.
   c) Change the energy of incident ions, E_{in}, to 30, 70, 110, or 150 eV.
   d) Change the position $R_{in} = (x^2+y^2)^{1/2}$ to 0, 0.05, 0.10 or 0.15 mm.
   (Note) As multiple calculations can be executed simultaneously, you can efficiently proceed the above exercises. The maximum number of calculation processes might be four or five in order to distinguish an individual process.

4. <u>Terminate the simulation program and restart it again</u>. Load the data file of mass spectra of stable isotopes which will be designated in the experiment. Record the peak of the mass spectrum M, peak intensity, and spectral width ΔM (full width at half maximum) of <u>the isotopes with a maximum isotope abundance ratio</u>. Determine the mass range to be examined referring to the distributed material. Use the specified values (L = 120 mm, E_{in} = 70 eV, a/q = 0.3356, and R_{in} = 0).

5. Many peaks exist in mass spectra because of the existence of isotopes and the dissociation (decomposition) of molecules, even if only one type of gas molecule is present in the vacuum chamber. Table II summarizes the relative intensities (pattern coefficients) of the peaks in the mass spectra of several gas molecules. Draw the mass spectra of samples in a data file (randomly selected on the day of the experiment), compare the mass spectra with the results in Table II, and determine the abundance ratios of the parent molecules contained in

the sample data file.

(Note 1) The number of parent molecules is three or four. Set the mass range to $M = 0.5 – 33.5$. First, set the mass step to approximately 0.5 to observe the general trend of the mass spectrum. Then, reduce the mass step (*e.g.*, ≤ 0.05) to examine the intensity of each mass spectrum in a narrower mass range. Use the specified values ($L = 120$ mm, $E_{in} = 70$ eV, $a/q = 0.3356$, and $R_{in} = 0$).

(Note 2) For the method of determining the spectral intensity, be sure to refer to the manual "How to Determine Mass Spectral Intensity in Task C5".

(Note 3) When the mass around 0 is examined in detail, it appears that there is a peak toward $M = 0$. As V_{ac} equals to 0 under the condition of $M = 0$, ions with any mass oriented to the detector have a chance to pass through the quadrupole mass spectrometer. Therefore, the signal is *not* a peak.

Table II Pattern coefficients [5] of major gas molecules. The relative intensities of other mass numbers appearing in the spectrum when the signal intensity at the mass number of the parent molecule is 100% are shown. When the signal intensity of the mass number 28 of N_2 is 100%, the signal intensity of mass number 14 is 7%, and the signal intensity of mass number 29 is 0.7%. When such a mass spectral pattern is obtained, it is considered that the peak of $M = 28$ is derived from N_2 not CO.

Molecule	H_2	CH_4	H_2O	CO	N_2	O_2
Mass number	2	16	18	28	28	32
	100(2)	100(16)	100(18)	100(28)	100(28)	100(32)
Inside	2(1)	85.9(15)	21.1(17)	4.7(12)	7(14)	11(16)
parenthesis		19(14)	0.9(16)	1.7(16)	0.7(29)	
indicates		8.1(13)	0.5(19)	1.2(29)		
mass		3.4(1)		0.8(14)		
numbers		2.8(12)				
		1.1(17)				

*The relative intensities at the mass number enclosed in parentheses are shown, assuming that the signal intensity at the mass number of parent molecules is 100%. For example, when the single intensity at the mass number of parent molecules (N_2) of 28 is assumed to be 100%, the signal intensities at a mass numbers of 14 and 29 are 7% and 0.7%, respectively. If such a mass spectral pattern is obtained, the peak at $M = 28$ is found to correspond to N_2, instead of CO.

【Preparation Exercises】

1. Summarize the procedures of Experiment A, B, and C (for example, in the form of a flowchart) in your lab notebook.
2. In related to Experiment B, determine the air resistance that a water droplet falling in the air with a radius a = 0.1 mm and a velocity $v = 1.2$ m / s (density $\rho = 1$ g/cm^3). Also, using the viscosity of air $\mu = 1.8 \times 10^{-5}$ kg m^{-1} s^{-1}, make sure that the gravity acting on this water droplet is almost the same value as the air resistance. Finally, make sure that a is consistent with the radius obtained using equation (12).

【Report Assignment】

Examine the experimental results, the contents of this text, and references, and explain and answer the following questions.

A. Measurement of frequency of charged microparticles trapped in a linear ion trap

[Exercise A]

1. Explain the principle of charged particle confinement in a linear Paul ion trap.
2. List all the forces acting on the charged microparticles in the linear ion trap and explain each force.
3. Explain why microparticles look like a rod when the duty cycle of the LED oscillator is 100%, and explain the measurement principle of the frequency of charged particles. Also sketch the state of the particles observed when flashing the light-emitting diode at a frequency half and twice that of the particle, and explain why it looks like that.
4. Consider what we need to observe the particles more clearly.

B. Measurement of mass and specific charge of trapped microparticles

【Exercise B】

1. Fill the following blanks based on the measurements (**Consider the significant figure**).

Data Number	Number of frames	T_L [s]	a [m]	m [kg]	$\Omega/2\pi$ [Hz]	$2V_{ac}$ [V]	Q/m	Q [C]	N_Q
1									
2									
3									

2. Consider the origins of the measurement errors of the microparticle radius (a) and the charge (Q). Give a discussion about how to reduce the measurement errors.

C. Computer simulation of quadrupole mass spectrometer

【Exercise C】

1. Explain how to set the parameters a and q in order to obtain mass spectra using a quadrupole mass spectrometer.
2. Fill the following blanks based on the simulation results in exercise C-3(a)-(d). Use the unit of the atomic mass is unified atomic mass unit "u".

a/q	peak height	ΔM	L (mm)	peak height	ΔM	E_{in} (eV)	peak height	ΔM	R_{in} (mm)	peak height	ΔM
0.333			40			30			0		
0.334			80			70			0.05		
0.335			120			110			0.1		
0.3356			160			150			0.15		

(a) Make the graphs of peak height and ΔM as a function of a/q
(b) Make the graphs of peak height and ΔM as a function of L
(c) Make the graphs of peak height and ΔM as a function of E_{in}
(d) Make the graphs of peak height and ΔM as a function of R_{in}

3. Based on the simulation results of Exercise C-3 and the graphs above, describe the effects of the following parameters on the mass resolution and the ion signal intensity in mass spectra: i) Ratio of a to q (a/q), ii) Length of the mass spectrometer (L), iii) incidence energy of ions (E_{in}), iv) Radius of incidence ion beam (R_{in}). Finally, give your idea of suitable conditions of the above parameters for the measurement of mass spectra using a quadrupole mass spectrometer.

4. Enter the element name X and the mass number A (the isotope with the highest abundance), fill in the blanks in the table, and attach it to the report.

Element ^{A}X				
M_{peak}				
peak height				
ΔM				
M (literature)				

5. Based on the simulation results of Exercise C-4 (from the above table), make a plot of the mass resolution ($M_{peak}/\Delta M$) as a function of the mass (M_{peak}) using the "EXCEL" software. Explain the tendency of the graph.

6. Explain in detail the causes of pattern coefficients of gas molecules.

7. Identify the parent molecules contained in the sample data from the results of Exercise C-5, and calculate the ratio of each. Specify the input file name that you have checked.

[References]

[1] Chronological scientific tables, Maruzen Co., Ltd. (2009) (in Japanese).
[2] H. Kumagaya *et al.*, Vacuum Science and Engineering, Physics Libraries 11, Shokabo Co., Ltd. (2001) (in Japanese).
[3] The Vacuum Society of Japan (ed.), Manual for ultrahigh vacuum experiments, Nikkan Kogyo Shimbun, Ltd. (1991) (in Japanese).
[4] A. Yoshizawa, Hydrodynamics, University of Tokyo Press (2001) (in Japanese).
[5] G. Horikoshi, Vacuum technology, University of Tokyo Press (1994) (in Japanese).

(Appendix A) Operation Manual for Linear Ion Trap

1. Outline of ion trapping system

Figure A1 shows a schematic of a linear ion trap, and Fig. A2 shows a wiring diagram of the entire ion trapping system. Cables are already connected. As shown in Fig. A2, a sine-wave AC voltage supplied from the oscillator for driving the linear ion trap [hereafter, Oscillator ①] is amplified via a neon sign transformer. The secondary terminal of the transformer outputs an AC voltage (V_{ac}) of a few kilovolts, which is applied to the rod electrodes to drive the ion trap. The DC voltage required for trapping ions along the z-axis (V_z) is provided by two DC power supplies, ① and ②, and is applied to three plate electrodes (V_{pL}, V_{pC}, and V_{pR}). An output signal from the oscillator for driving a light-emitting diode (LED) for illumination [hereafter, Oscillator ②] goes into the "**LED IN**" terminal. Table A1 shows the correspondence of the ion-trap-side Bayonet Neill–Concelman (BNC) connectors used as coaxial cables to output signals from each device. [Caution: Do not touch the secondary terminal of the neon sign transformer because it outputs a high voltage (a few kilovolts) and is very dangerous.]

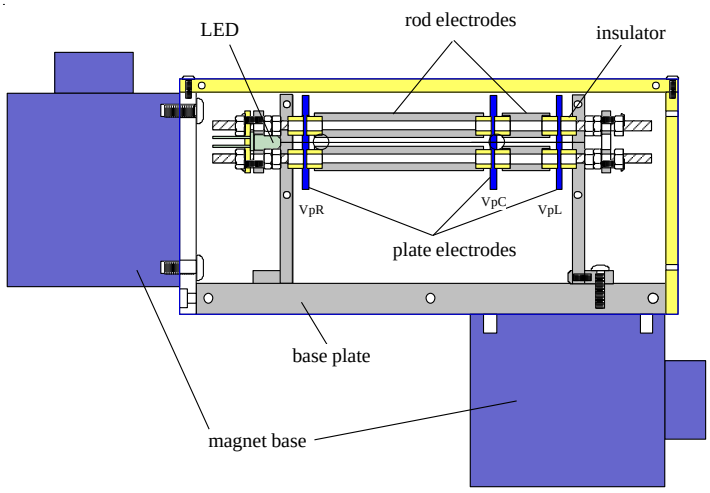

Fig. A1 Schematic of linear ion trap

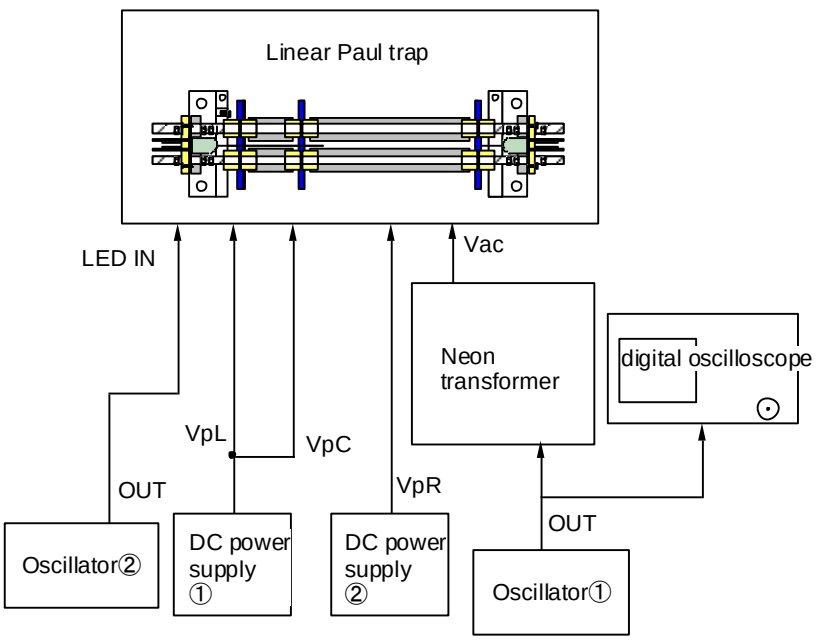

Fig. A2 Wiring diagram of linear ion trapping system

Table A1 Correspondence of connectors of linear ion trap to output signals

Signal output device	Connector	Role
Neon sign transformer	V_{ac}	Voltage for driving ion trap
DC power supply (1)	V_{pL}, V_{pC}	z-Axis DC voltage
DC power supply (2)	V_{pR}	z-Axis DC voltage
Oscillator (2)	LED IN	Signal for driving LED for illumination

*Do not touch buttons or knobs that are not explained in this manual. If you are unsure of the operating procedure, ask the staff member.

2. How to operate Oscillator (1) (GW INSTEK, SFG-2104)

(1) Turn on the power switch (shown in the red box on the lower left of Photo A1).

(2) Ensure that the waveform mark (red circle, Photo A1) indicates a sine wave (~). Otherwise, press the **WAVE** button several times until the sine wave mark (~) appears.

(3) Do not turn the **AMPL** knob (blue box, Photo A1), which is already set to an appropriate value.

(4) The frequency of the oscillator may be set to an appropriate value. For your confirmation, however, accurately adjust the frequency to a value that gives the maximum amplitude of AC voltage while observing the waveform shown on the digital oscilloscope. The frequency can be accurately adjusted by turning the rotary knob (green box, Photo A1) on the upper right of the oscillator panel. The digit of the frequency can be set by pressing the left or right key (◁ ▷; orange box, Photo A1) below the rotary knob. To change the frequency by a larger amount, press numeric keys to indicate the desired frequency on the display and press the frequency range button. For example, to set the frequency to 135.1 Hz, press the 1, 3, 5, ·, 1, and Hz keys in order.

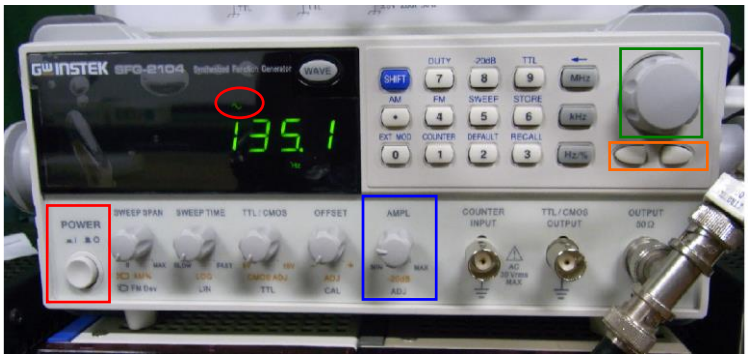

Photo A1 Oscillator (1) <GW INSTEK, SFG-2104>

3. How to set DC power supplies (1) and (2)

(1) Press the power button (red box, Photo A2) on the lower right of the panel to turn on the power. A value in the range of ~490–500 V will appear on the display. In this step, do not turn the white knobs (green boxes, Photo A2).

(2) Press the green **OUTPUT** button (blue box, Photo A2) to supply a voltage from the output terminal. [Caution: Do not touch the metal part of the output terminal (black box, Photo A2), which may cause electrical shock.]

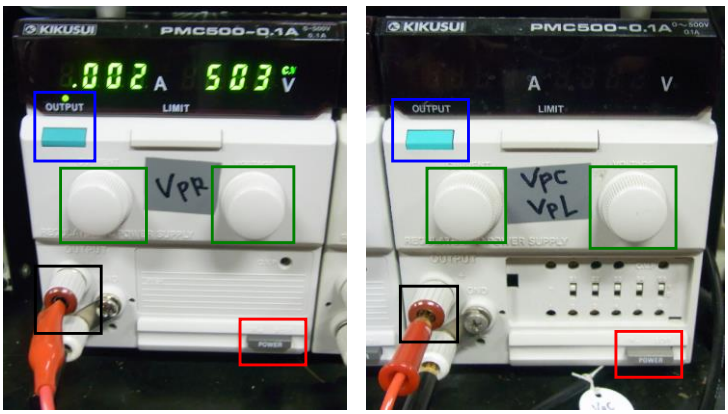

Photo A2 DC power supplies (1) and (2) for linear ion trap

The red and white terminals output positive and negative voltages, respectively. In the photograph, the white terminal is connected to the GND terminal and no negative voltage is supplied (that is, the voltage from the white terminal is 0 V).

4. How to operate Oscillator (2) (NF Corporation, DF-1906)

(1) Turn on the power switch (in the rear of the front display).

(2) To set the output waveform to a rectangular wave (П), press the **FUNCTION** key (blue box, Photo A3) and turn the **MODIFY** rotary knob (black box, Photo A3). The indication on the lower left of the display is switched in the following order: sine wave (~), triangular wave (И), rectangular wave (П), ARB1, ARB2, ARB3, ARB4, and DC.

(3) With the output waveform set to a rectangular wave (П), press the **FUNCTION** key again to change the duty ratio. Set the duty ratio to 100% by turning the **MODIFY** rotary knob (black box, Photo A3).

(4) Press the **OUTPUT** switch (red box, Photo A3) to light the LED brightly.

(5) To change the frequency, press the **FREQUENCY** button (green box, Photo A3) on the panel. Turning the **MODIFY** rotary knob changes the blink frequency of the LED (for duty ratio <100%). To select the digit on the display you wish to change, press the left or right key (◁ ▷) above the **MODIFY** rotary knob.

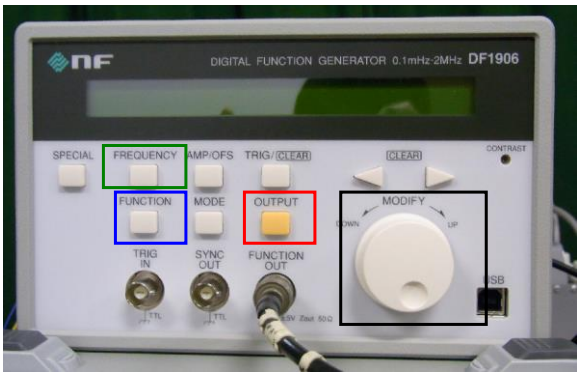

Photo A3 Oscillator (2) <Type 2; NF Corporation, DF-193A>

5. Experimental procedures for laboratory exercises

A. Measurement of vibration frequency of charged microparticles trapped in linear ion trap

1. Accurately adjust the frequency of Oscillator (1) (GW INSTEK, SFG-2104) so that the maximum AC voltage is applied while observing the waveform shown on the digital oscilloscope. Note that a value tenfold the voltage ($V_{p\text{-}p}$) shown on the digital oscilloscope is the value of the voltage actually applied to the ion trap ($2V_{ac}$, ~3000–4000 V at maximum).
2. Drive the LED at a duty ratio of 100%.

3. Introduce charged microparticles using a plastic dropper (Photo A4) as follows.
   I. Take a small number of alumina microparticles using a dropper. Here, the minimum amount is desired.
   II. Cover the open end of the dropper with your finger and direct it downward, as shown in Photo 4. This causes a small amount of microparticles to remain at the tip of the dropper.
   III. Insert the tip of the dropper into the inlet of the ion trapping system and press the bulb to blow the microparticles towards the surface of the rod electrodes. Looking through a magnifying glass, confirm visually that the microparticles are trapped.
   IV. If the microparticles are not trapped, repeat steps II and III.

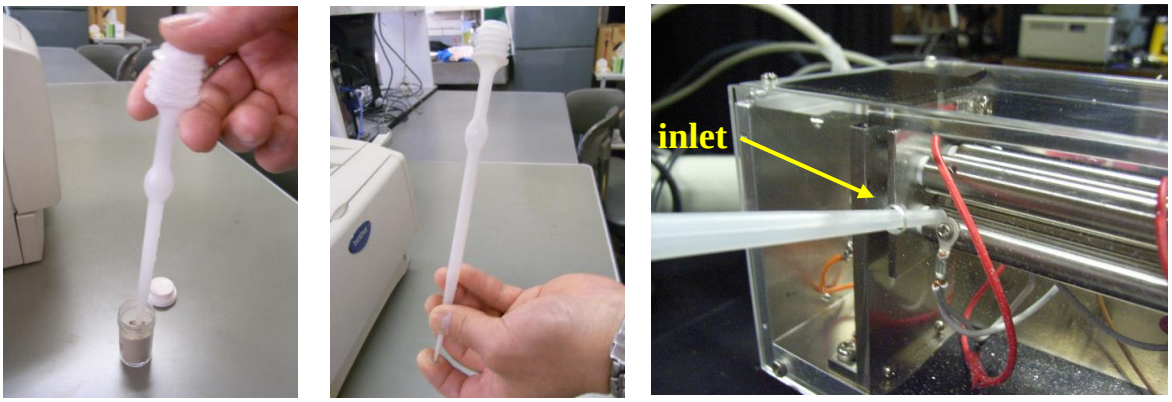

Photo A4 How to introduce microparticles using dropper. The number of microparticles taken using the dropper should be minimized.

4. Confirm visually that the microparticles are trapped. Record the experimental conditions (i.e., the driving frequency of the ion trap, the amplitude of AC voltage, and plate voltages) at this time.
5. Set the duty ratio of Oscillator (2) to 10%. Press the **FREQUENCY** button (green box, Photo A3) on the panel and turn the **MODIFY** rotary knob to set the frequency to 1 Hz.
6. Either you or your partner gradually increases the blink frequency of the LED from 1 Hz; the other carefully observes the behavior of the microparticles. When the blink frequency of the LED approaches the driving AC frequency of the ion trap, you see the microparticles vibrating. Confirm that the frequency at which this vibration almost stops is equal to the driving AC frequency of the ion trap (this frequency is the vibration frequency of the microparticles, f).
7. Drive the LED at frequencies of $f/2$, $2f$, and $3f$. Sketch the behavior of the microparticles and discuss the reasons for the behavior in your notebook.

B. Measurement of mass and specific charge of microparticles confined in linear ion trap

1. Turn off all the devices of the ion trapping system.
2. Place the linear ion trap vertically, as shown in Photo A5.
3. Turn on all the devices of the ion trapping system on again. Referring to the waveform shown on the oscilloscope, adjust the frequency of Oscillator (1) so that the maximum AC voltage is applied to the ion trap. Drive the LED at a duty ratio of 100%.
4. Verify that the settings of the digital camera are as follows.
   Shooting mode: Continuous mode, Ultrafast continuous LOW (60 frames/s)
   Focus adjustment: Manual focus (MF)
   Auto power-off function: OFF
5. To observe the inside of the second ion trap under a magnified view, set the digital camera so that the two black markings at an interval of 25 mm on the electrode reach the upper and lower ends of the camera monitor (Photo A5). First, bring the black markings into focus (the operating procedure for the digital camera will be explained by the TA). Then, adjust the focus on the trapped microparticles as follows.
   I. Trap the microparticles at the first ion trap (trapping of many microparticles is acceptable).
   II. While checking the camera monitor, turn off the **OUTPUT** switch (blue box, Photo A2) for the plate

voltage (V_{pC}) to drop the microparticles. If you cannot clearly capture the microparticles on the camera monitor, adjust the focus and perform steps I and II again until the microparticles are captured clearly on the monitor.

III. Finally, take shots of many dropping microparticles in the Continuous mode and confirm that the behavior of the dropping microparticles is recorded.

6. Carry out the main measurement. First, trap "only one" microparticle in the first ion trap. At this time, you do not need to supply additional microparticles to the dropper because the number of microparticles attached to the dropper is sufficient.
7. Confirm visually that only one microparticle has been trapped in the first ion trap. Then, remove the microparticles trapped in the second ion trap as follows.
   I. Turn off the **OUTPUT** switch for V_{pR} ($V_{pR} = 0$) and then turn the switch on again.
   II. If microparticles remain even after step I, insert the dropper into the lower hole on the second ion trap and press the bulb to blow away the remaining microparticles while taking care not to remove the microparticle in the first ion trap.
8. Drop the microparticle from the first ion trap and take continuous shots of the dropping microparticle as follows.
   I. Either you or your partner holds down the shutter button; immediately, the other turns off the **OUTPUT** switch (blue box, Photo A2) for the center plate electrode (V_{pC}).
   II. Note that the maximum shooting time in the Ultrafast Continuous mode is only 2 s (i.e., for 2 s after the shutter button is held down). Do not release the shutter button during the shooting time; otherwise, the shooting will end. Two seconds is sufficient to shoot the behavior of the dropping microparticle because the charged microparticle should drop immediately after the **OUTPUT** switch is turned off.
9. Playback the continuous shots using the digital camera. If the dropping microparticle has been successfully captured, carry out the measurement of the specific charge following the experimental procedures given in the textbook. If your shooting was unsuccessful, return to step 6.
10. After completing the given measurement, proceed to data analysis.

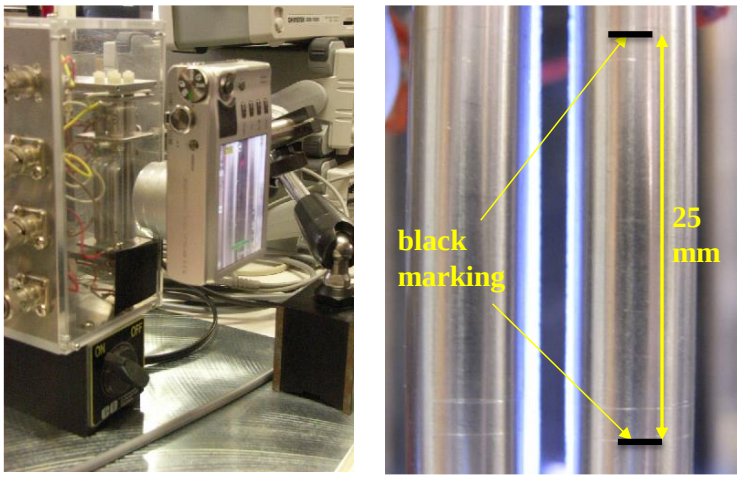

Photo A5 Linear ion trap vertically placed and setting of digital camera

Data analysis (Exercise B)

1. Playback the continuous shots frame by frame using the digital camera. Calculate the time required for the microparticle to drop the distance between the two black markings ($L = 25$ mm), T_L, from the number of frames of continuous shots and determine the dropping velocity v_z. *Note that an error of approximately 1/60 s should be considered for the calculation of T_L because the time resolution Δt is 1/60 s.
2. Following the instructions in the laboratory textbook, analyze the data using Microsoft Excel.

(Appendix B) Operation Manual for Mass Spectrometry Simulation Software

1. How to use simulation software

When you double-click the icon “QmassFilter_2019” on the desktop, the simulation program starts and the main window shown in Fig. B1 appears.

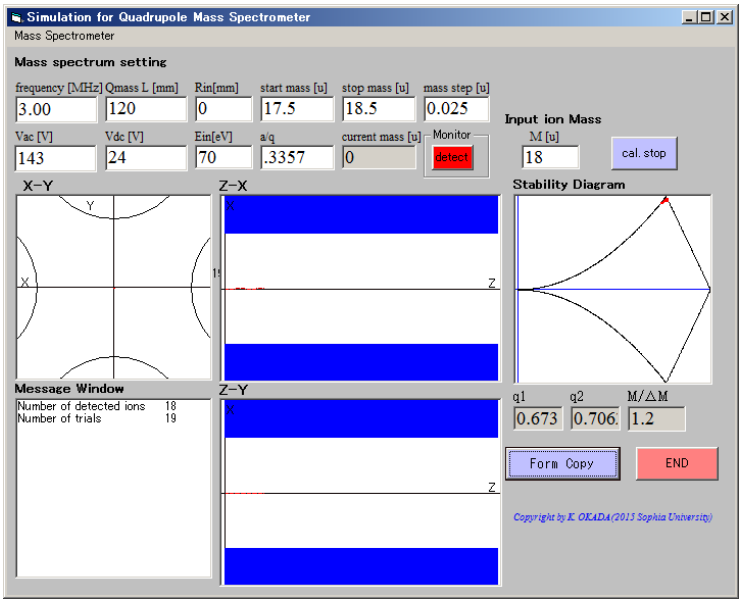

Fig. B1 Main window after start of simulation program

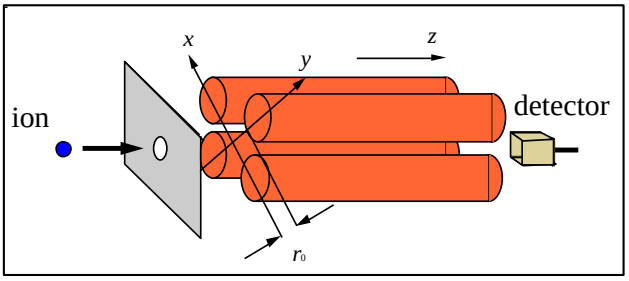

Fig. B2 How to set coordinates for quadrupole mass spectrometer

Clicking **Ion trajectory** in the **Mass Spectrometer** list on the menu bar displays the trajectories of incident ions in the quadrupole mass spectrometer. Clicking **Mass Spectrum** draws the mass spectra of the incident ions based on the information in the data file.

1-1. Input parameters

Among the following parameters, asterisked items must be set when you work on Exercise C. Other parameters do not need to be set.

■ **Mass spectrometer settings**

- **frequency [MHz]**: Frequency of AC voltage applied to quadrupole mass spectrometer
- V_{ac} **[V]**: Amplitude of high-frequency AC voltage applied to quadrupole mass spectrometer (*Exercise C-2)
- V_{dc} **[V]**: Amplitude of DC voltage applied to quadrupole mass spectrometer (*Exercise C-2)
- **Qmass L [mm]**: Length of mass spectrometer tube (*Exercises C-3)
- **start mass [u]** and **stop mass [u]**: Mass of ions in a sample at start and end of mass spectrometric measurement (unified atomic mass units) (*Exercises C-4, C-5)

- **mass step [u]**: Step width of mass for sweeping during mass spectrometric measurement (*Exercises C-4, C-5)

■ **Parameters related to incident ions**
- **Input ion mass M [u]**: Mass of incident ions (*Valid only for Exercises C-2. No change is required.)
- $\boldsymbol{E_{in}}$ **[eV]**: Energy of incident ions (eV) (*Exercise C-3)
- $\boldsymbol{R_{in}}$ **[mm]**: Radius of incident ion beam (*Exercises C-2, C-3)
- $\boldsymbol{a/q}$: Ratio of parameter a to parameter q (mass resolution) (*Exercise C-3)

■ **Other**
- **current mass [u]**: Mass of ions measured
- **detect**: Button with a red light that is turned on when the incident ions reach the detector
- **Form Copy**: Button used to copy the window onto the clipboard
- **cal. stop**: Button used to stop the calculation
- **END**: Button used to terminate the program

2. Exercises

2-1. Ion Trajectory Program (Exercises C-2)

This program calculates the trajectories of incident ions in the quadrupole mass spectrometer and returns the results. Use this program only for Exercise C-2. The calculation of the trajectories continues with randomly varying directions of the incident ions until you press the **END** button. Graphs shown in Fig.B1 appear when the program is run.

- *X-Y* graph: Ion trajectories on the *X-Y* plane (cross section) of the quadrupole mass spectrometer are drawn (refer to Figs.B1 and B2)
- *Z-X* graph: Ion trajectories on the *Z-X* plane of the quadrupole mass spectrometer are drawn. When the incident ions are transmitted into the detector, the red **detect** light in the monitor is turned on.
- Stability Diagram: Plots of the parameters $(\boldsymbol{a}, \boldsymbol{q})$ calculated from the preset values (*e.g.*, **mass M [u]**, **frequency [MHz]**, and amplitudes $\boldsymbol{V_{ac}}$ **[V]** and $\boldsymbol{V_{dc}}$ **[V]**) in the stable region. The $\boldsymbol{q1}$ and $\boldsymbol{q2}$ boxes indicate the values of q at the intersections between the preset slope $\boldsymbol{a/q}$ and the stable region. $\boldsymbol{M/\Delta M}$ indicates the mass resolution at that time.
- Message Window: When the **END** button is pressed, the number of incident ions in the quadrupole mass spectrometer and the number of detected ions are displayed.

2-2. Mass Spectrum Program (Exercises C-3 ~ C-5)

This program iteratively calculates the trajectories of ions that randomly enter the quadrupole mass spectrometer to determine the intensity of ions transmitted and to draw mass spectra. In this program, $\boldsymbol{V_{ac}}$ and $\boldsymbol{V_{dc}}$ automatically change following the preset values of $\boldsymbol{a/q}$, **start mass [u]**, and **stop mass [u]**.

■ **Procedures for setting parameters**

1. For example, to measure the mass of ions in the range M = 17.5–18.5 u, enter 17.5 u for **start mass [u]** and 18.5 for **stop mass [u]**. Set an appropriate value for **mass step [u]** in accordance with the given exercise. A wide step shortens the calculation time but provides rough spectra. A narrow step enables an in-depth analysis of spectra but requires a long calculation time.
2. The parameter $\boldsymbol{a/q}$ determines the resolution of the mass spectrometer. Set values as instructed in each exercise.
3. For other parameters, enter appropriate values as specified in the textbook.

■ **Procedures for running calculations**

1. Click **Mass Spectrum** in the menu bar and a dialog box will appear.
2. Click a data file of mass spectra (*e.g.*, "H2O" file) in the "gas_data" folder and a window for mass spectra will

appear to start a calculation (Fig. B3). For operations using graphs, refer to the next section.

3. To stop the calculation, press the **cal.stop** button in the main window.
4. When the calculation is completed, “END” is displayed in the Message Window.

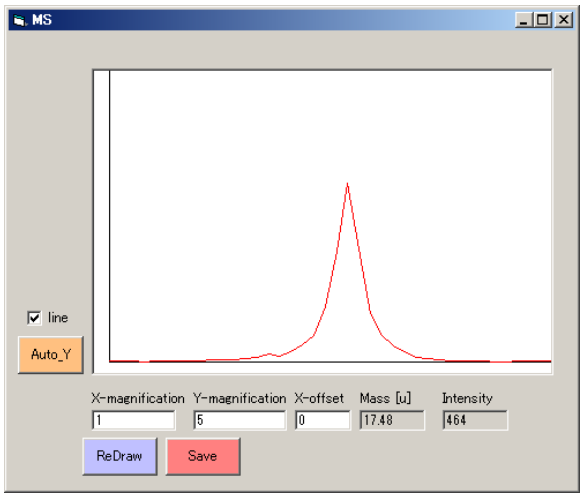

Fig. B3 Example of mass spectrometric measurement

■ Manipulation of mass spectra and reading of mass and peak value

- To display the entire graph, press the **Auto-Y** button.
- To determine the peak of the mass spectrum, move the mouse cursor onto the peak and read the value in the **Mass [u]** box. In such a case, the peak value of the spectrum is shown in the **Intensity** box.
- If you enter, for example, −0.1 for the **X-offset** box and press the **ReDraw** button, the spectrum is shifted to the left by 0.1 u.
- To manually scale the graph, change the values for **X-magnification** and **Y-magnification** appropriately and press the **ReDraw** button. For example, setting 2 for **X-magnification** with respect to a graph for M = 17.5–18.5 u enlarges the graph and displays part of the graph for M = 17.5–18.0 u only (the region with M = 18.0–18.5 u is not shown).
- **Save** button: The spectrum is saved as text data.

■ Definition of half width of mass spectrum

In exercise C-3 (a)-(d), first, search the peak height and calculate the half of the peak height. Then, read the mass values at the half maximum. Finally, ΔM is obtained by the mass difference of the mass values at the half maximum.

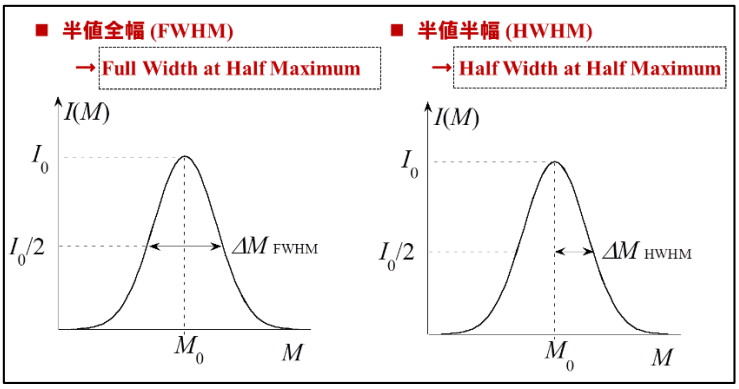

Fig.B4 Definition of spectral width.

■ How to obtain an intensity of a spectrum for Exercise C-5

In exercise C-5, you may need to know an accurate intensity of a specific mass spectrum. In this case, you can use the **Sum signal** button to obtain the intensity of the spectrum interested. The procedures to obtain the intensity of the mass spectrum shown in the below figure as follows:

1. Set the mass range in which the mass spectrum is included (the colored area in the figure). Set appropriate values for **M_left [u]** and **M_right[u]**.
2. Push the **Sum signal** button. The calculation result is shown in **Sum** text box. The calculated value corresponds to the intensity of the spectrum.

   (Note) When comparing the intensities of spectra having different mass numbers, it is necessary to compare spectra measured at the same mass step (mass resolution). It is not possible to compare mass spectra obtained at different mass steps.

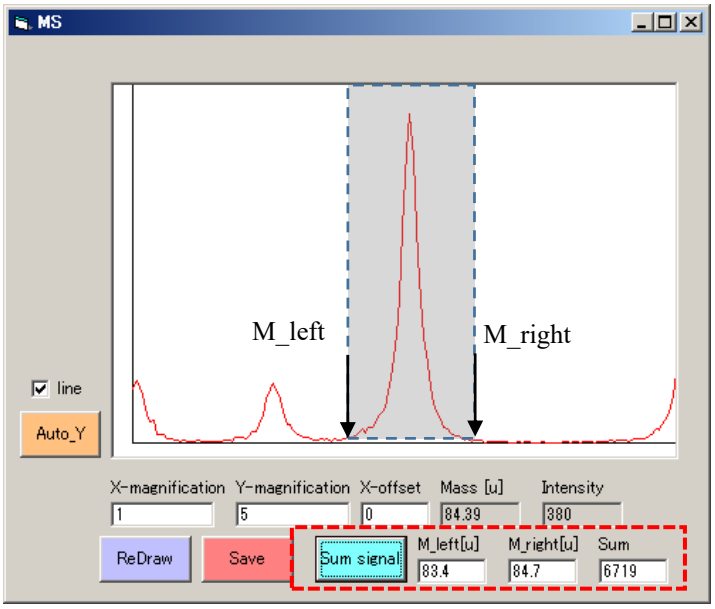

Fig.B5 Calculation of each spectrum intensity.